polyhydron	COVER WITH STROKE LIMITER, SHUTTLE VALVE & D. C. VALVE. **CVC*STS***	**ENGINEERING**	**1**
		Ref. No. P09524 Release 03/2009	

Description

Designed to control opening & closing of the cartridge valve.

Cover has built-in seat type shuttle valve & Solenoid D.C.V. for electrical controlling the opening & closing of the cartridge.

Stroke limiter is provided to limit the max. opening of the cartridge.

Configurations shown in the hydraulic symbol are available.

Hydraulic symbol

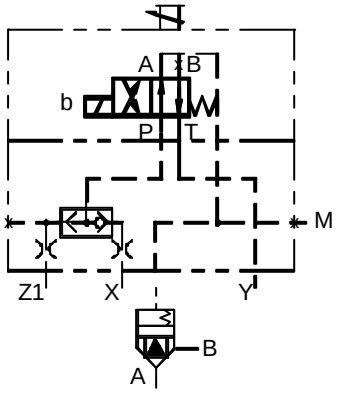

Normally open
Control on port A
(Model : CVC25STSA)

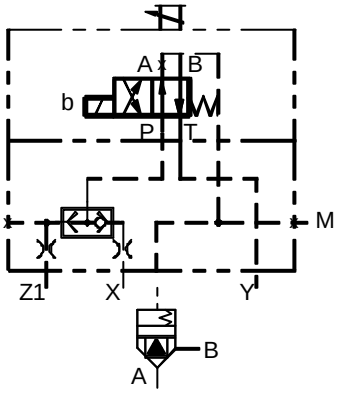

Normally open
Control on port B
(Model : CVC25STSB)

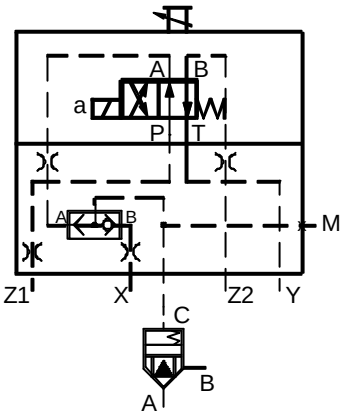

Normally open
Control on port A
(Model : CVC25STSAA)

Polyhydron Pvt. Ltd.
78-80, Machhe Industrial Estate,
Machhe, Belgaum - 590 014. INDIA.

Phone : +91-(0)831-2411001
Fax : +91-(0)831-2411002
E-mail : polyhydron@gmail.com
Website : www.polyhydron.com

polyhydron	COVER WITH STROKE LIMITER, SHUTTLE VALVE & D. C. VALVE. **CVC*STS***	**ENGINEERING**	**2**
		Ref. No. P09524 Release 03/2009	

Unit dimension

Dimensions in mm.

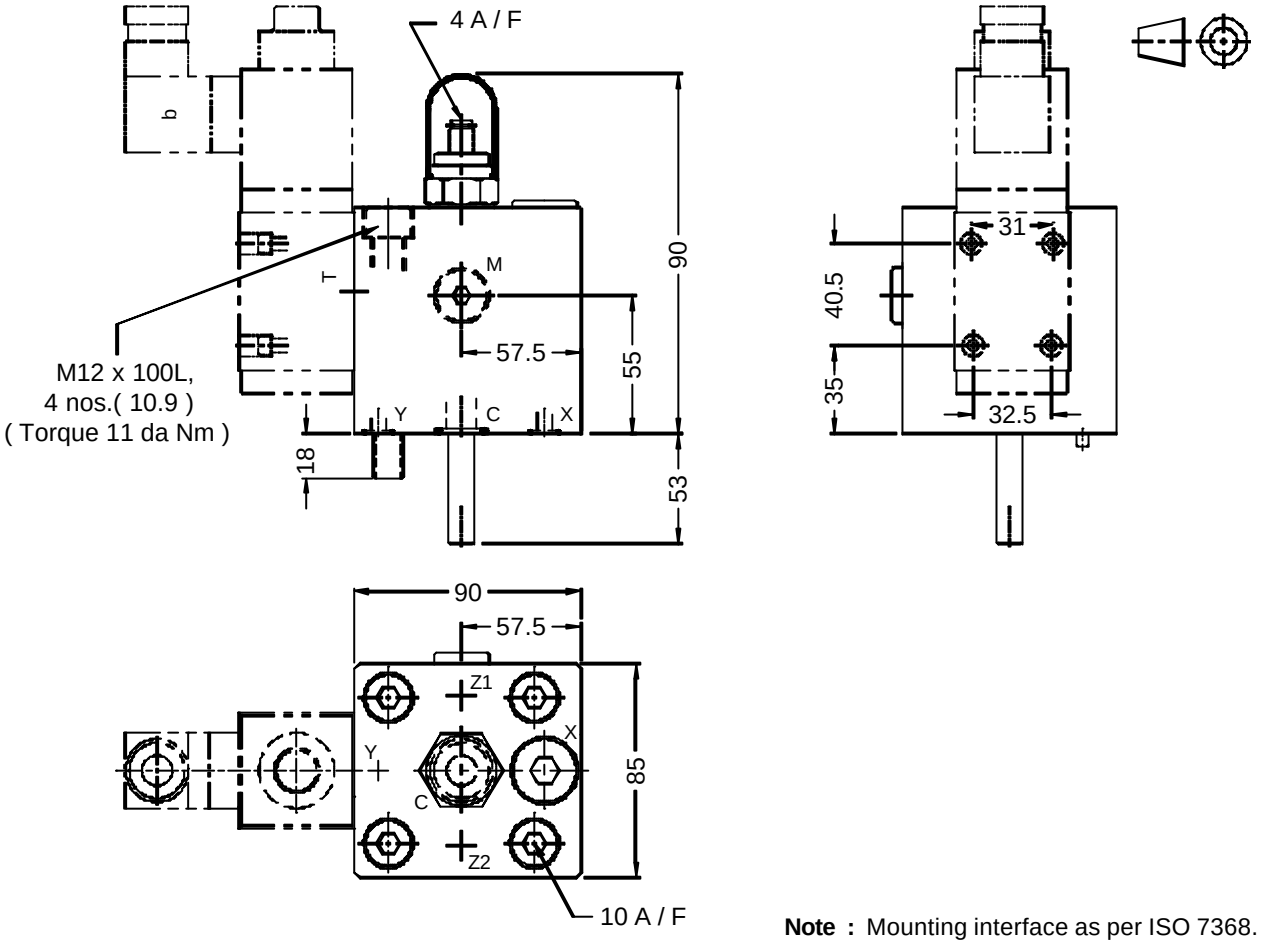

Note : Mounting interface as per ISO 7368.

Ordering code

CVC	25	S	T	S	B	10

- CVC: Cartridge valve cover.
- 25: Size - 25
- S: Built in shuttle valve.
- T: With Stroke Limiter
- S: H – Hand Knob.; S – Set Screw.
- B:

A	Control on A
B	Control on B
AA	Control on AA

- 10: Design code subject to change. Installation dimensions remain same for design code 10 thru 19.

Spool type

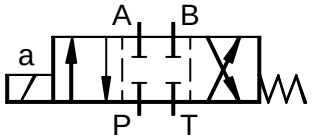

All rights reserved.
Subject to revision.

Note : Solenoid (refer spool type) to be ordered separately.